RAPID HOLDING SYSTEMS INC

// CNC-PC SERIES · FCS COMPATIBLE

RHS CNC PULL CLAMPS

The complete lineup of modular pull-clamping screws, modules and fixture plates — engineered for precision, built for the shop floor.

SKUS	REPEATABILITY	STANDARD	CLAMPING
17+	±0.005 MM	FCS · WOW	6–18 KN

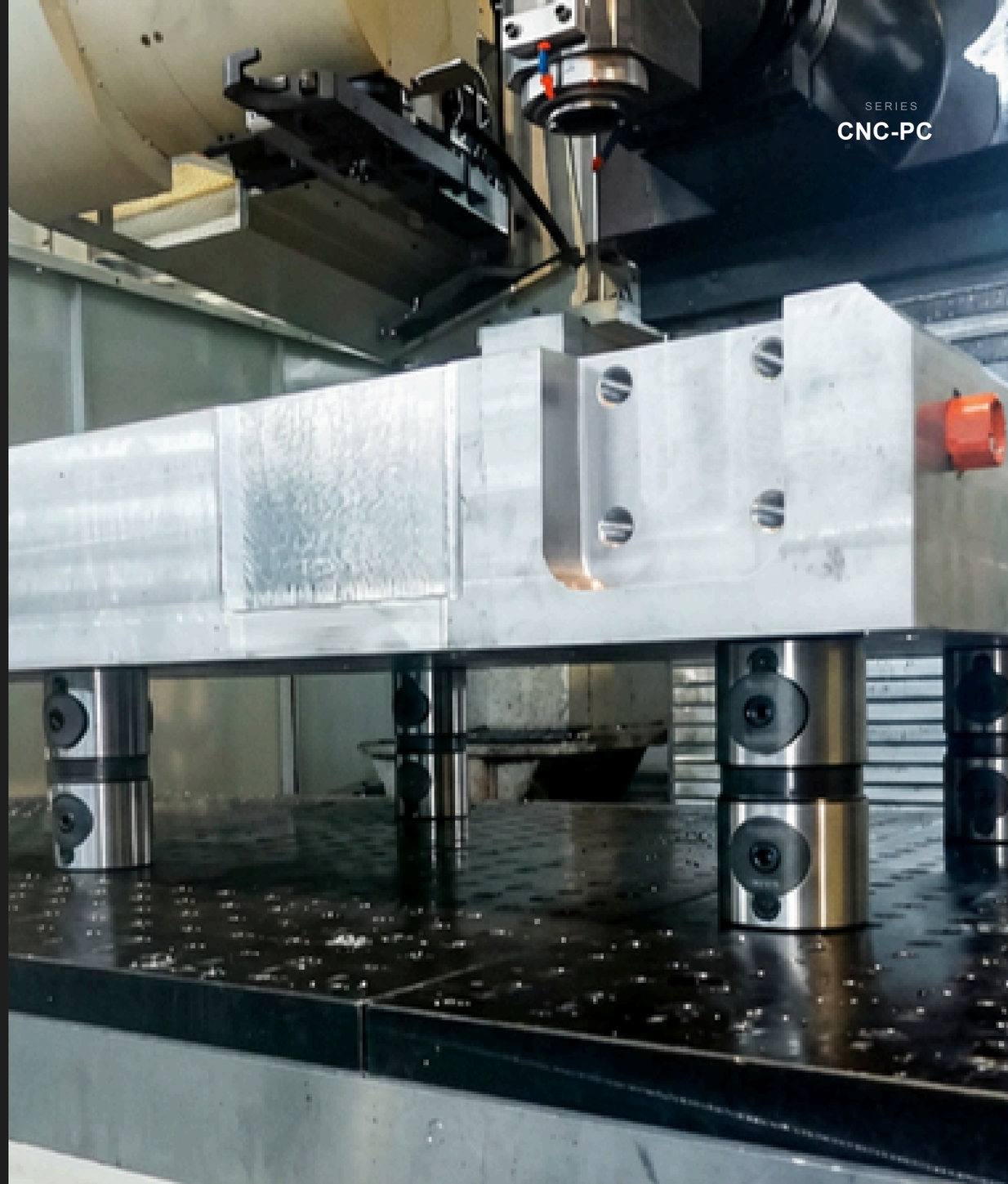

RAPID HOLDING SYSTEMS INC

ABOUT THE SYSTEM

HIGH-QUALITY, AFFORDABLE TOOLING.

The **CNC Pull Clamping System** is a modular zero-point workholding solution engineered for horizontals, verticals, EDM and 5-axis machining. One mounting interface covers screws from M8 to M16 and modules from 40 to 80 mm — stackable to any height.

±0.005 mm
REPEATABILITY

18 kN
MAX CLAMPING

46-60 HRC
HARDNESS

WHY SPEC RHS

01 / FIT

FCS & WOW COMPATIBLE

Drop-in replacement for existing tooling ecosystems — no retooling of fixtures or plates.

02 / MATERIAL

CHROME STEEL, FULLY HARDENED

46–60 HRC on modules, 44–52 HRC on screws. Built for daily clamping cycles.

03 / STACK

MODULAR HEIGHTS

Single and double modules stack to reach any workpiece height without custom fixturing.

04 / PRICE

DIRECT-FROM-MANUFACTURER

Premium metrology, affordable line-item cost. Quantity pricing on request.

05 / PLATES

UNIVERSAL FIXTURE PLATE

50 mm pitch hole pattern — mount any combination of modules on a single platform.

06 / SERVICE

TECUMSEH, ONTARIO · CANADA

Local inventory and technical support. Shipping across North America.

RAPID HOLDING SYSTEMS INC

PRODUCT LINEUP

EVERY SKU, ONE SYSTEM

Twelve part numbers grouped into three families — clamping screws, single modules, and stacked/flanged modules — plus the universal fixture plate.

SKU	PAGE	NAME	SIZE	CLAMPING	TORQUE	WEIGHT
RHS-C4001	→ 04	TAPERED CLAMPING SCREW · M8	SIZE Ø15.8 × 32.5 mm	FORCE 6 000 N	TORQUE —	WEIGHT 0.8 kg
RHS-C6001	→ 05	TAPERED CLAMPING SCREW · M12	SIZE Ø23.6 × 50 mm	FORCE 6 000 N	TORQUE —	WEIGHT 0.8 kg
RHS-C8001	→ 06	TAPERED CLAMPING SCREW · M16	SIZE Ø31.5 × 65.5 mm	FORCE 6 000 N	TORQUE —	WEIGHT 0.8 kg
RHS-C6002	→ 07	PULL-DOWN MODULE 60 · SINGLE	SIZE 60 × 60 mm	FORCE 12 000 N	TORQUE 30 Nm	WEIGHT 2.34 kg
RHS-C8002	→ 08	PULL-DOWN MODULE 80 · SINGLE	SIZE 80 × 80 mm	FORCE 18 000 N	TORQUE 40 Nm	WEIGHT 3 kg
RHS-C4002	→ 09	PULL-DOWN MODULE 40 · DOUBLE	SIZE 40 × 80 mm	FORCE 6 000 N	TORQUE 15 Nm	WEIGHT 4.5 kg
RHS-C6003	→ 10	PULL-DOWN MODULE 60 · DOUBLE	SIZE 60 × 120 mm	FORCE 12 000 N	TORQUE 30 Nm	WEIGHT 5 kg
RHS-C8003	→ 11	PULL-DOWN MODULE 80×160 · DOUBLE	SIZE 80 × 160 mm	FORCE 18 000 N	TORQUE 40 Nm	WEIGHT 6 kg
RHS-C8004	→ 12	PULL-DOWN MODULE 80×200 · DOUBLE	SIZE 80 × 200 mm	FORCE 18 000 N	TORQUE 40 Nm	WEIGHT 7 kg
RHS-C8007	→ 13	CLAMPING MODULE · FLANGED	SIZE 75 × 42 × 40 mm	FORCE 6 000 N	TORQUE 15 Nm	WEIGHT —
RHS-C7002	→ 14	HOOK CLAMPING MODULE D80 · FLANGE	SIZE 150 × 80 × 74 mm	FORCE 18 000 N	TORQUE 40 Nm	WEIGHT —
RHS-C8006	→ 15	CLAMPING MODULE DIA. 80 MM SINGLE	SIZE 100 × 80 × 73 mm	FORCE 18 000 N	TORQUE 40 Nm	WEIGHT —
RHS-C7001	→ 16	CNC PULL DOWN CLAMPING MODULE 80 FLANGED	SIZE 145 × 80 × 80 m	FORCE 18 000 N	TORQUE 30 Nm	WEIGHT —
RHS-C1001	→ 17	UNIVERSAL FIXTURE PLATE	PITCH 50 mm	FIT FCS / WOW	CUSTOM On request	TYPE Modular plate

Ø15.8 × 32.5 MM · M8

SKU
C4001

RHS-C4001

TAPERED CLAMPING SCREW, M8

Compact pull stud for mounting directly to workpieces or riser blocks. Self-locating taper interfaces with FCS-compatible modules in the Ø40 pattern.

PART NUMBER	**RHS-C4001**
SIZE	Ø15.8 × 32.5 mm
MATERIAL	Chrome steel
HARDNESS	HRC 44–52
CLAMPING FORCE	**6 000 N**
WEIGHT	0.8 kg
COMPATIBILITY	FCS pull-down modules, Ø40 series

THREAD
M8

LOCATING
SELF·TAPERED

SERIES
CNC-PC

Ø23.6 × 50 MM · M12

SKU
C6001

RHS-C6001

TAPERED CLAMPING SCREW, M12

Mid-size clamping screw for Ø60 modules. Hardened chrome steel, self-locating taper. Drop-in compatible with FCS Ø60 pattern.

PART NUMBER	**RHS-C6001**
SIZE	Ø23.6 × 50 mm
MATERIAL	Chrome steel
HARDNESS	HRC 44–52
CLAMPING FORCE	**6 000 N**
WEIGHT	0.8 kg
APPLICATION	For Ø60 module

THREAD
M12

MODULE
Ø60MM

SERIES
CNC-PC

Ø31.5 × 65.5 MM · M16

SKU
C8001

RHS-C8001

TAPERED CLAMPING SCREW, M16

Heavy-duty clamping screw for Ø80 modules. Full-hardness taper optimized for repeated setup cycles on 5-axis and HMC fixtures.

PART NUMBER	**RHS-C8001**
SIZE	Ø31.5 × 65.5 mm
MATERIAL	Chrome steel
HARDNESS	HRC 44–52
CLAMPING FORCE	**6 000 N**
REPEATABILITY	±0.005 mm
APPLICATION	For Ø80 module

THREAD
M16

MODULE
Ø80MM

WEIGHT
0.8KG

60 × 60 MM · SINGLE STUD

SKU
C6002

RHS-C6002

PULL-DOWN MODULE 60, SINGLE

FCS-compatible single-stud module for standard-height workpieces. Bolt-down mounting for fixture plates. Accepts RHS-C6001 M12 screws.

PART NUMBER	**RHS-C6002**
SIZE	60 × 60 mm
MATERIAL	Chrome steel
CLAMPING FORCE	**12 000 N**
HARDNESS	46–60 HRC
MAX TORQUE	30 Nm
REPEATABILITY	±0.005 mm
WEIGHT	2.34 kg

STUDS	FORMAT	PAIRS WITH
1	**SINGLE**	**C6001**

80 × 80 MM · SINGLE STUD

SKU
C8002

RHS-C8002

PULL-DOWN MODULE 80, SINGLE

Heavy-duty single-stud module for 5-axis and HMC fixtures. 18 kN pull-down force with ±0.005 mm repeatability setup-to-setup.

PART NUMBER	**RHS-C8002**
SIZE	80 × 80 mm
MATERIAL	Chrome steel
CLAMPING FORCE	**18 000 N**
HARDNESS	46–60 HRC
MAX TORQUE	40 Nm
REPEATABILITY	±0.005 mm
WEIGHT	3 kg

STUDS	FORMAT	PAIRS WITH
1	**SINGLE**	**C8001**

40 × 80 MM · STACKED

SKU
C4002

RHS-C4002

PULL-DOWN MODULE 40, DOUBLE

Stacked double module for extended workpiece heights. Two M8 pull points on a single 40×80 footprint — inventory efficient, setup fast.

PART NUMBER	**RHS-C4002**
SIZE	40 × 80 mm
MATERIAL	Chrome steel
CLAMPING FORCE	**6 000 N**
HARDNESS	46–60 HRC
MAX TORQUE	15 Nm
REPEATABILITY	±0.005 mm
WEIGHT	4.5 kg

STUDS	FORMAT	PAIRS WITH
2	**DOUBLE**	**C4001**

60 × 120 MM · STACKED

SKU
C6003

RHS-C6003

PULL-DOWN MODULE 60, DOUBLE

Mid-size stacked module for standard 5-axis clearance. Pairs with two RHS-C6001 M12 screws for 12 kN total pull-down force.

PART NUMBER	**RHS-C6003**
SIZE	60 × 120 mm
MATERIAL	Chrome steel
CLAMPING FORCE	**12 000 N**
HARDNESS	46–60 HRC
MAX TORQUE	30 Nm
REPEATABILITY	±0.005 mm
WEIGHT	5 kg

STUDS	FORMAT	PAIRS WITH
2	**DOUBLE**	**C6001**

80 × 160 MM · STACKED

SKU
C8003

RHS-C8003

PULL-DOWN MODULE 80×160, DOUBLE

High-force stacked module for tall workpieces and heavy material. Delivers 18 kN pull-down with two M16 taper points on an 80×160 footprint.

PART NUMBER	**RHS-C8003**
SIZE	80 × 160 mm
MATERIAL	Chrome steel
CLAMPING FORCE	**18 000 N**
HARDNESS	46–60 HRC
MAX TORQUE	40 Nm
REPEATABILITY	±0.005 mm
WEIGHT	6 kg

STUDS	FORMAT	PAIRS WITH
2	**DOUBLE**	**C8001**

80 × 200 MM · EXTENDED

SKU
C8004

RHS-C8004

PULL-DOWN MODULE 80×200, DOUBLE

Extended-length stacked module for long workpieces and extra reach — 80×200 footprint with the same 18 kN force and ±0.005 mm repeatability.

PART NUMBER	**RHS-C8004**
SIZE	80 × 200 mm
MATERIAL	Chrome steel
CLAMPING FORCE	**18 000 N**
HARDNESS	46–60 HRC
MAX TORQUE	40 Nm
REPEATABILITY	±0.005 mm
WEIGHT	7 kg

STUDS	FORMAT	PAIRS WITH
2	**EXTENDED**	**C8001**

75 × 42 × 40 MM · FLANGED

SKU
C8007

RHS-C8007

CLAMPING MODULE, FLANGED

Low-profile flanged base with side-mount release. Ideal for fixture plates and edge mounting where overhead clearance is limited.

PART NUMBER	**RHS-C8007**
SIZE	150 × 74 × 80 mm
MATERIAL	Chrome steel
CLAMPING FORCE	**18,000 N**
HARDNESS	46-60 HRC
MAX TORQUE	40 Nm
REPEATABILITY	±0.005 mm
MOUNTING	Side-mount release

FORMAT
FLANGED

PROFILE
LOW

RELEASE
SIDE

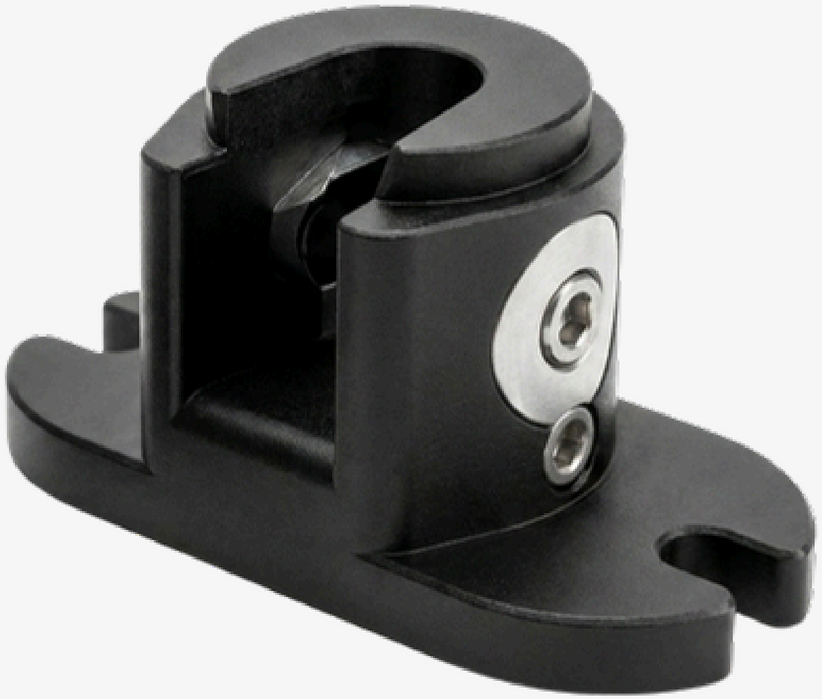

150 × 80 × 74 MM · FLANGED

SKU
C7002

RHS-C7002

HOOK CLAMPING MODULE D80, FLANGE

High-force hook module with side release — the heavy-duty complement to C7001. Used on edge-mount fixtures requiring 18 kN pull-down.

PART NUMBER	**RHS-C7002**
SIZE	150 × 80 × 74 mm
MATERIAL	Chrome steel
CLAMPING FORCE	**18 000 N**
MAX TORQUE	40 Nm
REPEATABILITY	±0.005 mm
MOUNTING	Side-mount hook release
APPLICATION	Edge fixtures · D80 modules

FORMAT	PROFILE	RELEASE
HOOK	**HEAVY**	**SIDE**

100 × 80 × 73 mm

SKU
C8006

RHS-C8006

HOOK CLAMPING MODULE DIA. 80 MM SINGLE

Designed for strong clamping force and precision repeatability.

PART NUMBER	**RHS-C8006**
SIZE	100 × 80 × 73 mm
MATERIAL	Chrome steel
CLAMPING FORCE	**18 000 N**
MAX TORQUE	40 Nm
REPEATABILITY	±0.005 mm
MOUNTING	Side-mount hook release
APPLICATION	CNC machining / EDM / robotic automation / modular fixturing

FORMAT	PROFILE	RELEASE
HOOK	**HEAVY**	**SIDE**

150 × 80 × 74 MM · FLANGED

SKU
C7001

RHS-C7001

FCS COMPATIBLE CNC PULL DOWN CLAMPING MODULE 80 FLANGED

Engineered for secure and repeatable clamping of fixtures and palletized workpieces.

PART NUMBER	**RHS-C7001**
SIZE	145 × 80 × 80 m
MATERIAL	Chrome steel
CLAMPING FORCE	**18 000 N**
MAX TORQUE	30 Nm
REPEATABILITY	±0.005 mm
MOUNTING	Side-mount hook release
APPLICATION	Clamping Module Ø80 mm, Flanged

FORMAT	PROFILE	RELEASE
HOOK	**HEAVY**	**SIDE**

RAPID HOLDING SYSTEMS INC

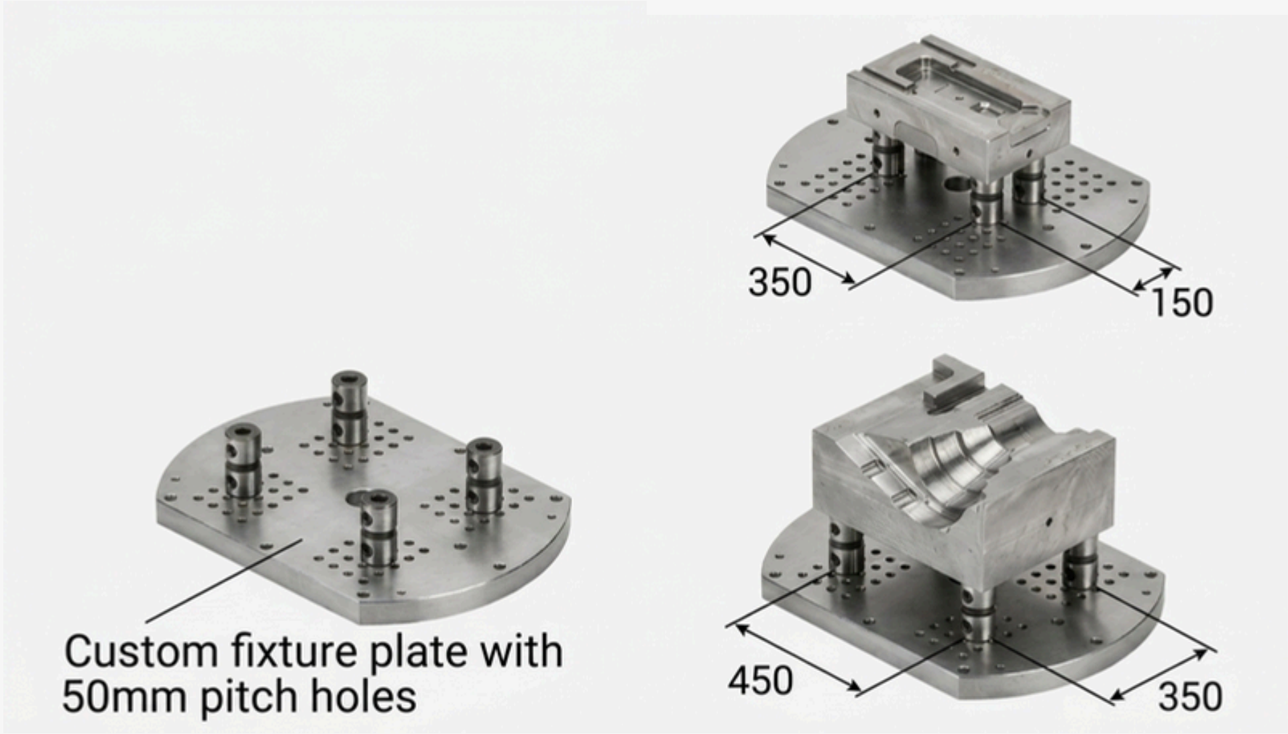

RHS-C1001

Universal fixture plate.

Modular 50 mm pitch pattern — mount any combination of pull-down modules on a single platform. Compatible with FCS, WOW and RHS fixtures.

50mm	FCS/ WOW	∞
HOLE PITCH	COMPATIBILITY	MODULE COMBOS

TYPE	Universal fixture plate
MATERIAL	Precision ground steel / hardened tool steel
MOUNTING	Modular positioning with locating pillars & clamping
CUSTOM	**Custom hole patterns on request**
APPLICATIONS	EDM · Milling · CNC workholding

GET IN TOUCH.

Request a quote, confirm compatibility with your current fixtures, or order direct. Local inventory in Tecumseh, Ontario — shipping across North America.

PHONE

+1 (519) 999-9723

EMAIL

sales@rapidholdingsystems.com

WEB

www.rapidholdingsystems.com

SHOP & INVENTORY

11555 County Rd 42 Tecumseh, ON N8N 0H1 Canada